REVISION HISTORY				
REV	DCO	DESCRIPTION	DATE	INITIALS
A	2267	INITIAL RELEASE	12/23/09	ASYMMONS
B	2340	MODIFED HOLDER FOR RECESS, ADDED PLATING	03/19/10	ASYMMONS
C	4390	UPDATED FORMAT	12/29/15	PL
D	5189	HOLDER MATERIAL WAS 416 SS	12/21/2017	JC

NOTES: UNLESS OTHERWISE SPECIFIED

1. -OA1- IS THE THEORETICAL OPTIC AXIS OF THE FIRST OPTIC SURFACE.

2. MATERIAL: D-ZLAF52LA(m)
   HOLDER MATERIAL: SF20F SST

3. ASPHERIC SURFACES ARE DEFINED BY:

$$z(r) = \frac{r^2/R_c}{1+\sqrt{1-(1+K)(r/R_c)^2}} + \sum_i A_{2i} r^{2i}$$

WHERE: Y= RADIAL DISTANCE FROM VERTEX IN mm

4. SURFACE DEFINITIONS:

	SURFACE 1	SURFACE 2
TYPE	ASPHERE	PLANO
SHAPE	CX	PL
CA	Ø1.20	Ø0.39
R_C	0.775189	PLANO
K	-0.858850	0.000000
A_2	0.000000E0	0.000000E0
A_4	1.184170E-1	0.000000E0
A_6	5.573248E-2	0.000000E0
A_8	7.628790E-3	0.000000E0
A_{10}	2.206415E-2	0.000000E0
A_{12}	-7.012478E-2	0.000000E0
A_{14}	0.000000E0	0.000000E0
A_{16}	0.000000E0	0.000000E0

5. NOMINAL DESIGN PARAMETERS.

DESIGN WAVELENGTH	1550 nm
W.D.	0.2 mm
N.A.	0.6
E.F.L.	1.0mm ± 1.0%

6. FEATURES IDENTIFIED AS ℄ ARE CRITICAL CHARACTERISTICS.
   CRITICAL CHARACTERISTICS ARE GUARANTEED IN PRODUCTION.

7. THIS ELEMENT MUST MEET THE SCRATCH/DIG REQUIREMENTS ACROSS THE FULL CLEAR APERTURES INDICATED, BOTH SIDES, PER LIGHTPATH PWI INS-8.2-05P6.℄
   -00: S/D: 40/20

8. THIS ELEMENT IS USED AS A COLLIMATING LENS.
   WAVEFRONT ERROR: @ 100% APERTURE < 0.120 WAVES RMS @ 632.8nm;
   @ 50% APERTURE < 0.200 WAVES P-V
   PER LIGHTPATH PWI INS-8.2-03.℄

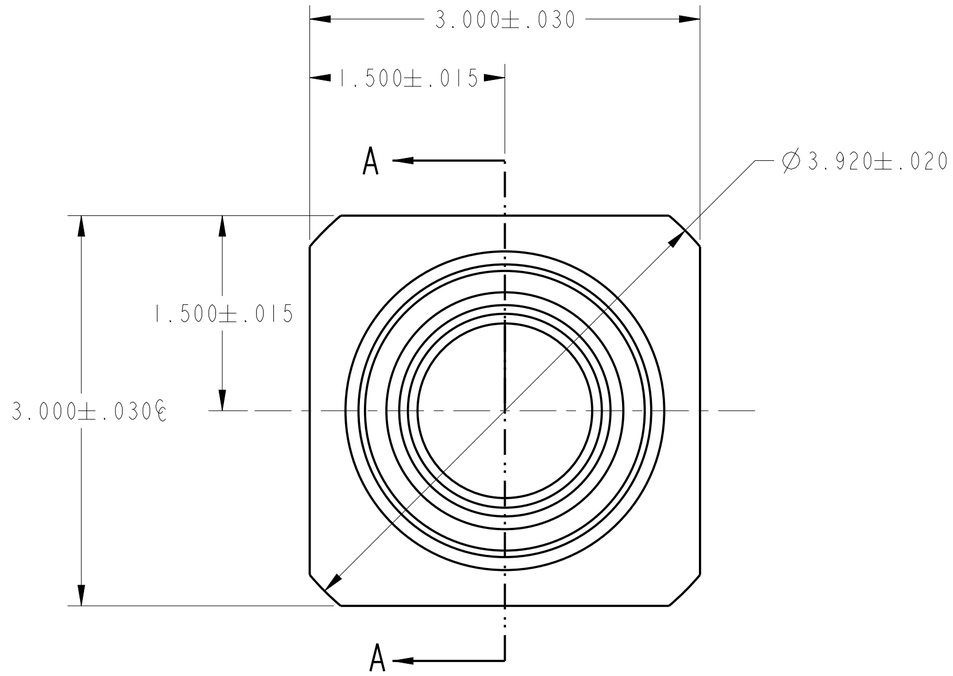

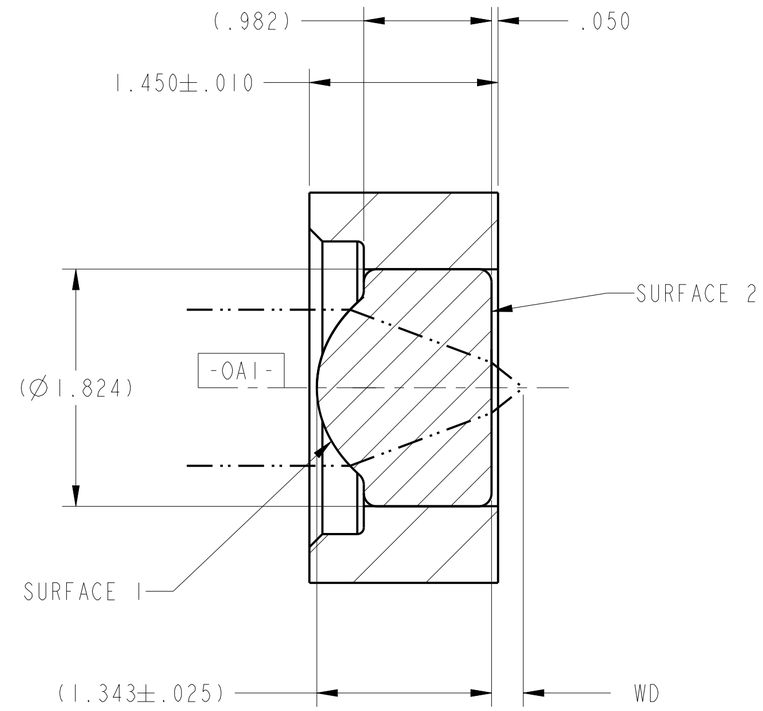

SECTION A-A

UNLESS OTHERWISE SPECIFIED
DIMENSIONS ARE IN MM.
DECIMAL TOLERANCES ARE:
.X ± 0.25
.XX ± 0.10
.XXX ± 0.025
.XXXX ± 0.013
ANGLES: ± 0.5°

DRAWN: ASYMMONS\ORL

MATERIAL: SEE NOTES

SOFTWARE: Pro/ENGINEER

LightPath TECHNOLOGIES
2603 CHALLENGER TECH CT. SUITE 100
ORLANDO, FL 32826

PROPRIETARY INFORMATION
THIS DOCUMENT CONTAINS PROPRIETARY INFORMATION OF LIGHTPATH TECHNOLOGIES AND IS NOT TO BE DISCLOSED OR REPRODUCED IN WHOLE OR PART, OR USED FOR MANUFACTURING FOR ANYONE OTHER THAN LIGHTPATH TECHNOLOGIES WITHOUT ITS WRITTEN CONSENT. NO RIGHT IS GRANTED TO DISCLOSE OR USE ANY INFOMATION CONTAINED IN SAID DOCUMENT.

TITLE: LENS CODE 355960

SIZE: A2 | DWG NO: 0355960 | REV: D

SCALE: 30.00 | THIRD ANGLE PROJECTION | SHEET 1 OF 1

RoHS

REV D | SH 1 | DWG NO 0355960